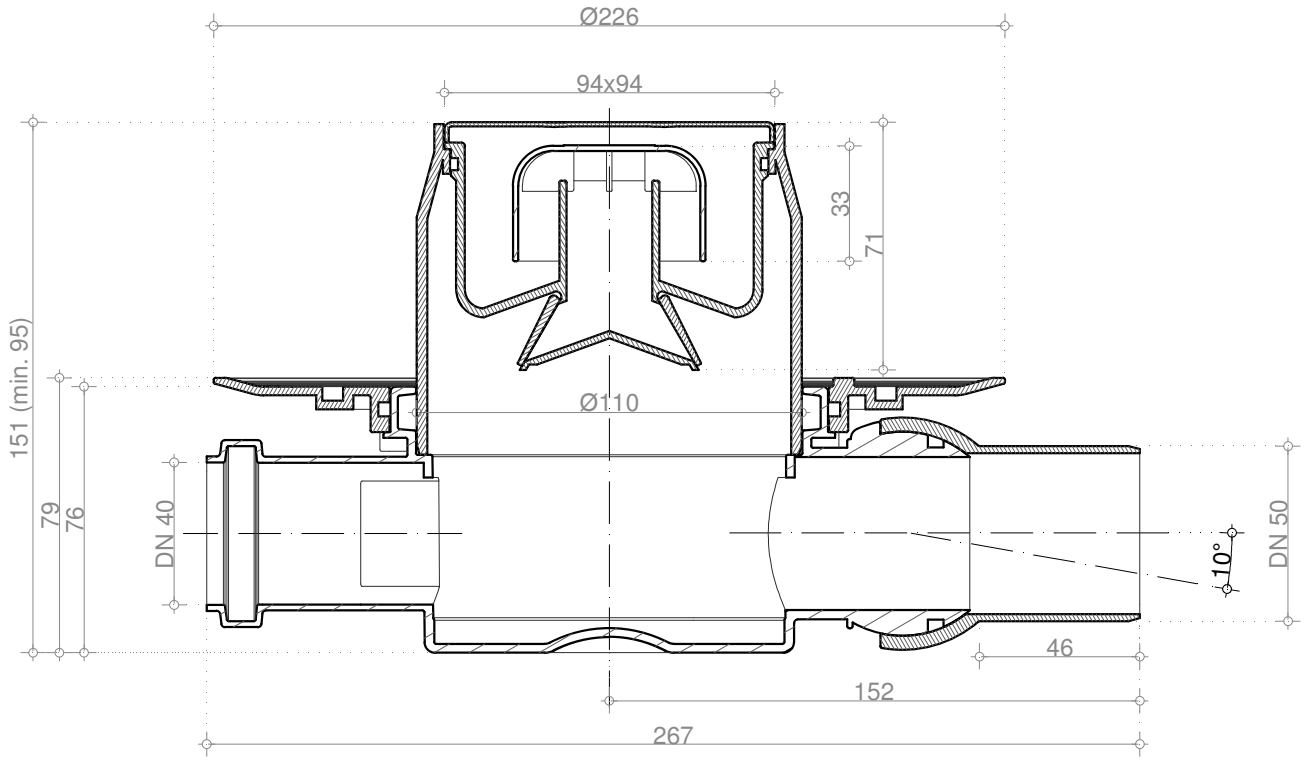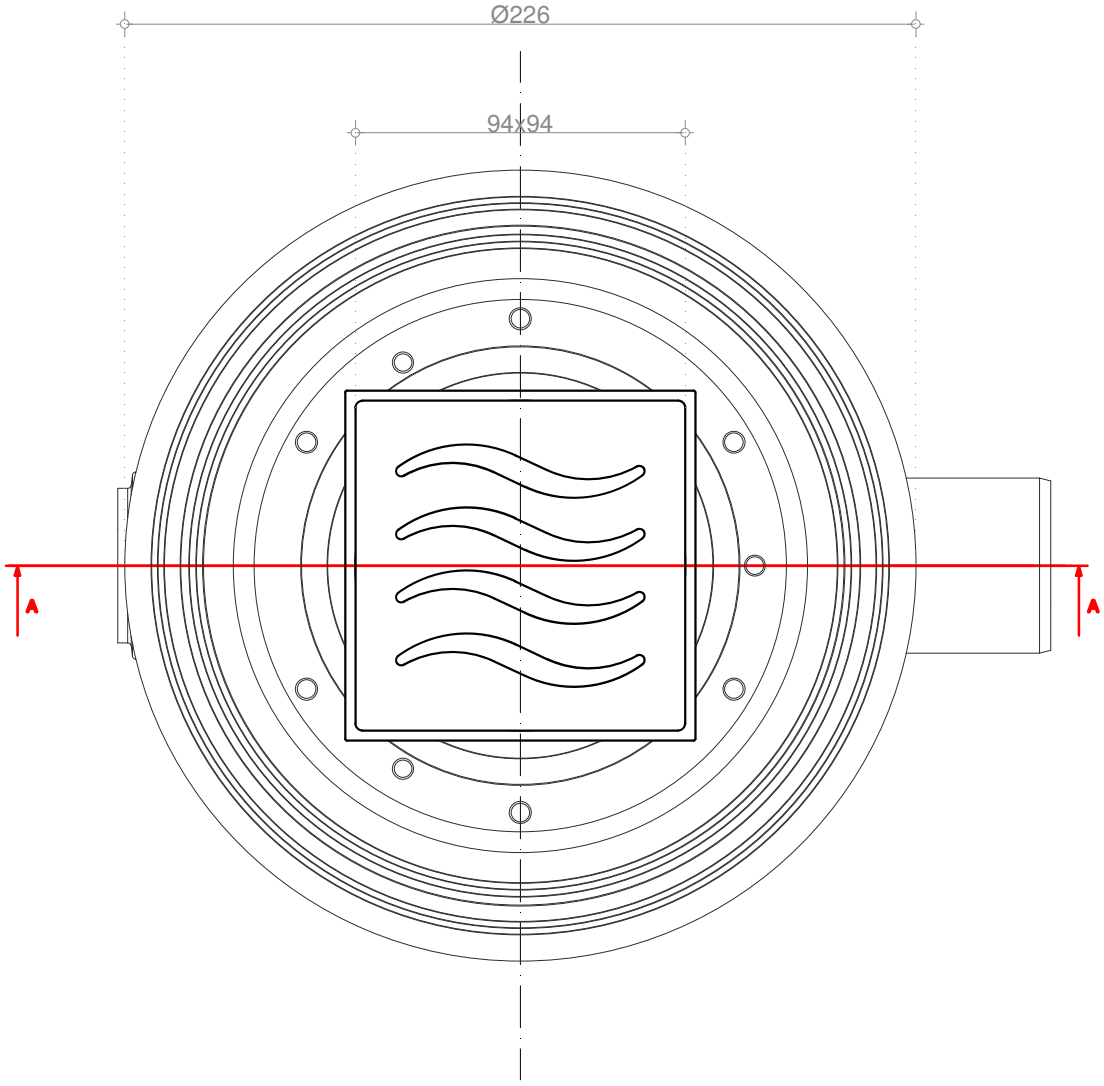DRY 2 _ Tehnicki crtez